CHESS DECK MOUNT VALVE SET

Cat. No.
U210.0/84

FRANZ VIEGENER

Barclay
for something special

3/4” Deck Mount Valve Set

Holes to drill in countertop: 1 1/4”

Features

- ►All brass construction
- ►Ceramic quarter turn disc cartridges
- ►3/4” Rough in valves
- ►25 year limited warranty on mechanical components
- ►7 year warranty on finishes

Finishes

CR Chrome
PE Brushed Nickel

Compliance Certification:
Meets or exceeds the following specifications:
ASME A112.18.1-2003

Cleaning and Care Instructions:

We recommend you wipe your faucets dry after every use. This will prevent accumulation of mineral deposits left when water evaporates. Use a soft cloth for wiping all surfaces.

Avoid harsh and abrasive cleaners on all faucet surfaces. Use only a soft, damp cloth with mild liquid soap to clean the finished surfaces of all faucets, including coated polished brass, gold, brushed nickel, etc.

Painted and plated surfaces alike, should be coated regularly with a thin protective film. Non-abrasive liquid car wax is recommended.

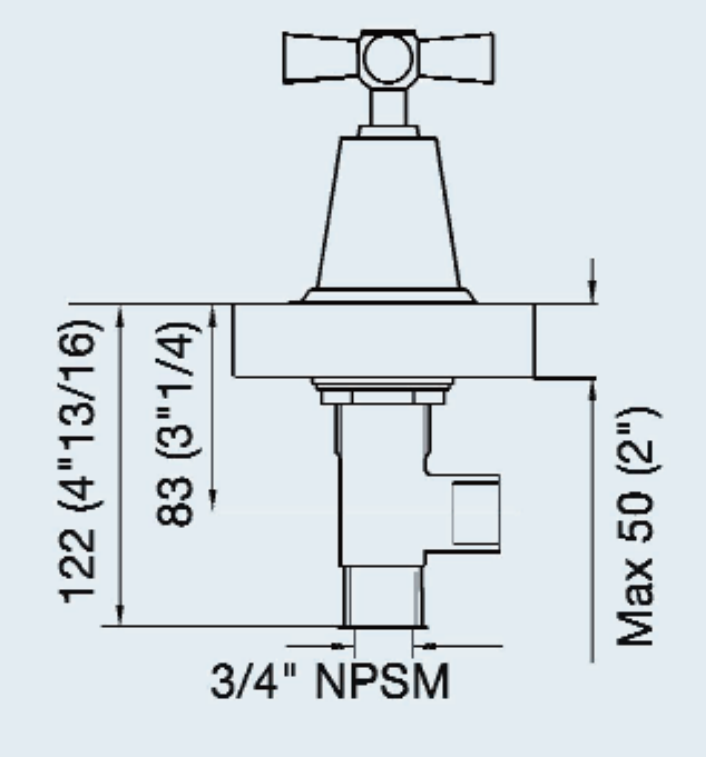

Dimensions and specifications subject to change without notice.

P 847•244•1234 | www.barclayproducts.com